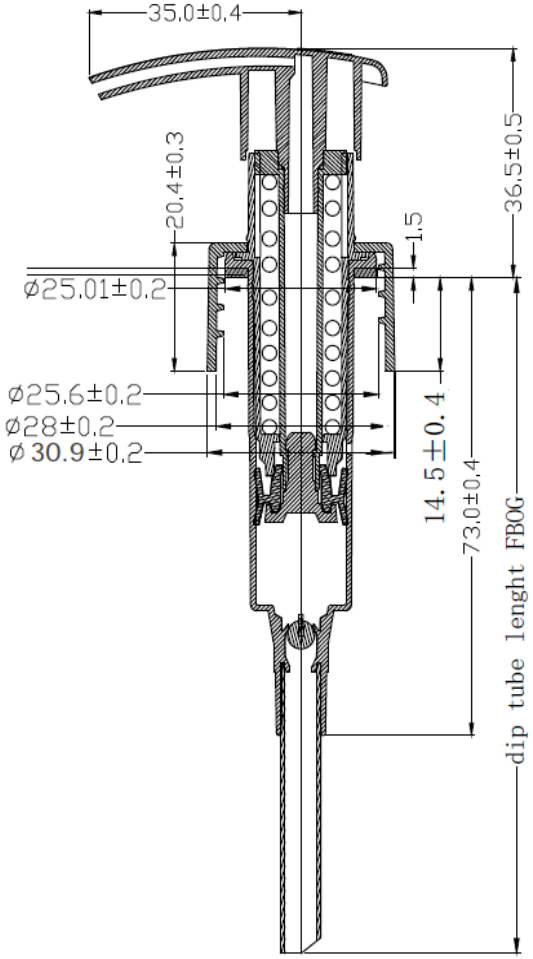

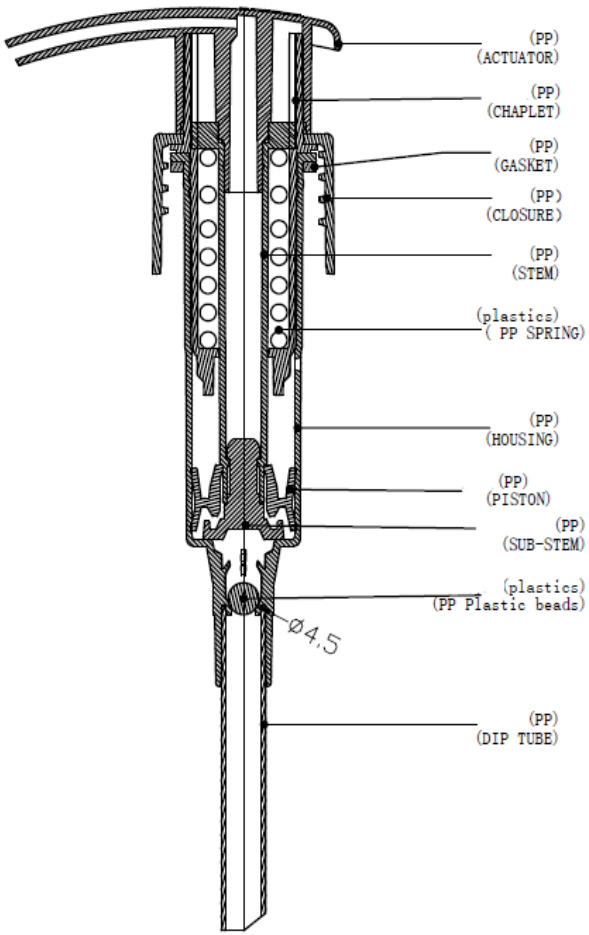

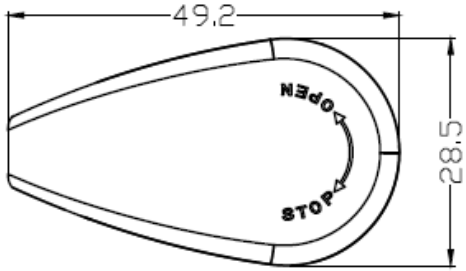

Height/Lengh	Tolerance
<1	±0.2
>1	±0.4
>5	±0.8
>50	±1.0
>100	±1.6
>200	±2.0
Diameter	Tolerance
<25	±0.4
>25	±0.8
>50	±1.2

Revision	Date	Modifications		
00	14/10/2025	Technical drawing modified to Pact format	**Material Code**	3339931
			Material	PP
			Unit	mm
			Weight	17±0.5g
			Dip tube (FBOG)	225±2 mm
			Output	2±0.3ml
			Colour	White
			Approved by:	

PACT PACKAGING | Synergy

Drawing no.	LPSW24410MONO-W-3339931	***Controlled***

Description: PMP LOTION MONO SW28410 WHT

Classification: Internal